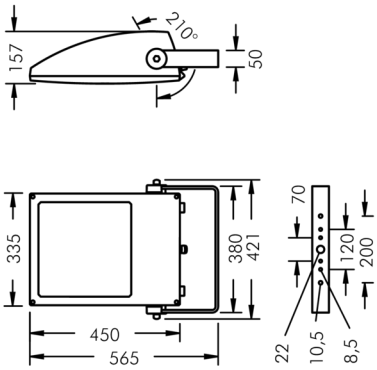

Fluxa B

8 289 065 069

2 × 79 W, 13843 lm, 4000 K neutral white, asymmetrical 53°

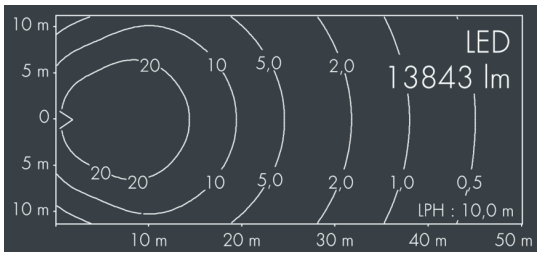

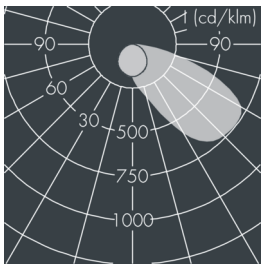

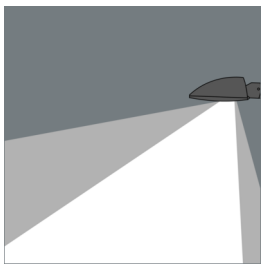

Customized solutions and modifications are possible: Special RAL, DB or NCS colours as polyester powder coat, luminaires in 2700 K and other colour temperatures and versions for high ambient temperature.

Specification text

housing made of corrosion-resistant die-cast aluminum AlSi12, polyester powder coated by high-quality and UV-stabilized coating process, Colour: white RAL 9002, all exterior parts are stainless steel, tempered safety glass, anti-reflective coating from 1 side, with prismatic glass
for reduced glare, silicon gasket, closure with 4 stainless steel screws, powder coated aluminum mounting bracket with tilt scale: 4 holes Ø 8.5 mm, spacing 70 mm (120 mm), 2 drilled holes Ø 10 mm, spacing 200 mm, 1 centre hole Ø 22 mm, tilt range: 210°, cable gland: M20, connecting terminal: 3 pole, highly efficient anodized rotationally symmetrical reflector with matt finish, integral driver (AC/DC), CRI > 75, max 2 SDCM, service life L90/B10 > 50.000 h, luminous flux: 13843 lm, wattage: 157 W, delivered lumens 88 lm/W, protection type IP65, protection class I, impact resistance IK09, windage area 0,16 m², dimensions (L×H×W): 450 × 150 × 335 mm, weight 9.3 kg

The modular luminaire design makes the replacement of components possible. The product meets the demands of the applicable EU guidelines and product safety regulations and bears the CE mark.

IP65 IK09

Specification

Wattage	157 W	Housing colour	white RAL 9002
Delivered lumens	88 lm/W	Power supply cable	Ø 8 – 15 mm
Light source	LED 4000 K	Protection type	IP65
Color Rendering Index	CRI > 75	Protection class	I
Colour tolerance	max 2 SDCM	Impact resistance	IK09
Lifetime ta 25° C	L90/B10 > 50.000 h	Windage area	0,16m²
Control gear	on / off	Dimensions	450 × 150 × 335 mm
Input voltage AC	220 – 240 V	Weight	9,30 kg
Input voltage DC	195 – 255 V	Max. ambient temperature ta	35°
Voltage protection	6 kV L/N | 10 kV L/PE		
Luminaires per B16A / C16A	5 / 10		