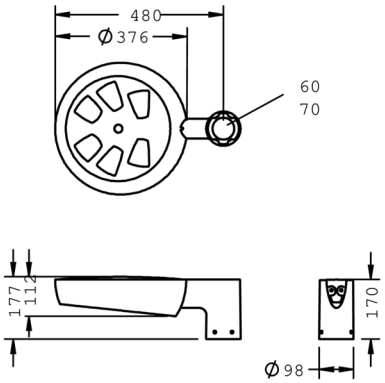

Metaspace

8 215 356 359

6 × 6,3 W, 3647 lm, 3000 K warm white, Zhaga 18 - up,
lateral wide beam 46° / 142°

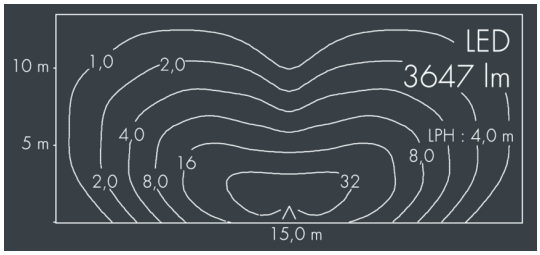

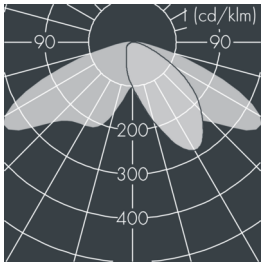

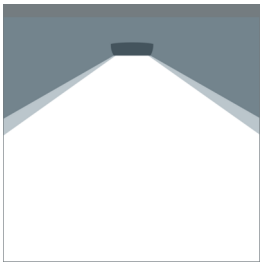

Customized solutions and modifications are possible: Special RAL, DB or NCS colours as polyester powder coat, luminaires in 2700 K and other colour temperatures and versions for high ambient temperature.

Specification text

housing made of corrosion-resistant die-cast aluminum AlSi12, polyester powder coated by high-quality and UV-stabilized coating process, Colour: silver grey , all exterior parts are stainless steel, tempered high effiency safety glass, anti-reflective coating from 1 side, dark screenprint, silicon gasket, closure with 5 stainless steel screws, with pole top fitter for 1 luminarie for poles Ø 60/76 mm, fastening with 4 set screws M8,
cable gland: M20, with 8 m cable H07RN-F3G1,
connecting terminal: 3 pole, highly efficient metallized PC reflector, integral driver (AC/DC), CRI > 80, 3,
service life L80/B20 > 50.000 h,
Beam angle (FWHM): 46° / 142°, luminous flux: 3647 lm, wattage: 38 W, delivered lumens 97 lm/W, protection type IP65, protection class I, impact resistance IK08, windage area 0,056 m², dimensions: Ø 376 mm, width 112 mm, weight 5.1 kg

The modular luminaire design makes the replacement of components possible. The product meets the demands of the applicable EU guidelines and product safety regulations and bears the CE mark.

IP65 IK08

Specification

Wattage	38 W	Beam angle (FWHM)	46° / 142°
Delivered lumens	97 lm/W	Housing colour	silver grey
Light source	LED 3000 K	Protection type	IP65
Color Rendering Index	CRI > 80	Protection class	I
Colour tolerance	3	Impact resistance	IK08
Lifetime ta 25° C	L80/B20 > 50.000 h	Windage area	0,056m²
Control gear	Zhaga 18 - oben	Dimensions	Ø 376 mm, width 112 mm
Input voltage AC	220 – 240 V	Weight	5,10 kg
Input voltage DC	220 – 240 V	Max. ambient temperature ta	40°
Voltage protection	6 kV L/N | 10 kV L/PE		
Luminaires per B16A / C16A	20 / 33		