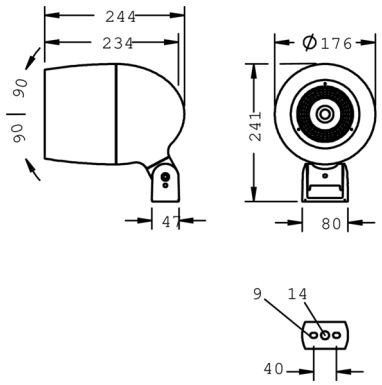


## Metaspot 2 Darkring Optic

8 236 046 149

3 × 13 W, 2771 lm, 3000 K warm white, DALI, medium wide beam 27°

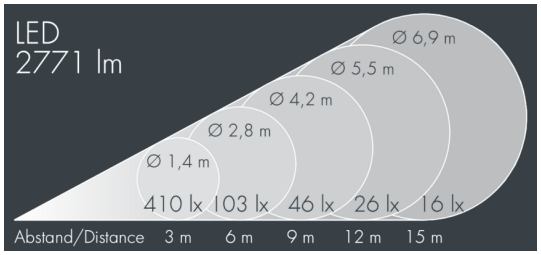


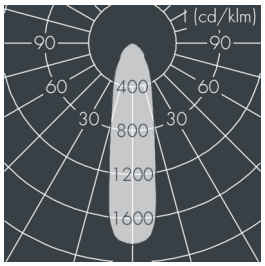


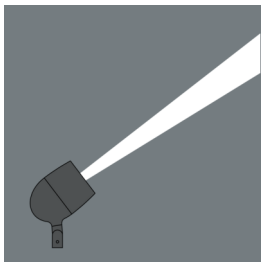

Customized solutions and modifications are possible: Special RAL, DB or NCS colours as polyester powder coat, luminaires in 2700 K and other colour temperatures and versions for high ambient temperature.

### Specification text

housing made of corrosion-resistant die-cast aluminum AlSi12, polyester powder coated by high-quality and UV-stabilized coating process, Colour: black RAL 7021, all exterior parts are stainless steel, tempered safety glass, anti-reflective coating from 1 side, dark screenprint, silicon gasket, tool-free twist closure, mounting bracket: 2 drilled holes Ø 9 mm, spacing 40 mm, 1 centre hole Ø 14 mm, tilt range: 180°, cable gland: M20, connecting terminal: 5 pole, light source completely shielded, high gloss aluminium reflector, inegral, dimmable driver (DALI), CRI > 80, 3, service life L80/B10 > 50.000 h,
Beam angle (FWHM): 27°, luminous flux: 2771 lm, wattage: 39 W, delivered lumens 71 lm/W, protection type IP65, protection class II, impact resistance IK08, windage area 0,042 m², dimensions: Ø 176 mm, width 244 mm, weight 3.8 kg

The modular luminaire design makes the replacement of components possible. The product meets the demands of the applicable EU guidelines and product safety regulations and bears the CE mark.

IP65 IK08

## Specification

| | | | |
|---|---|---|---|
| Wattage | 39 W | Beam angle (FWHM) | 27° |
| Delivered lumens | 71 lm/W | Housing colour | black RAL 7021 |
| Light source | LED 3000 K | Power supply cable | Ø 6 – 11 mm |
| Color Rendering Index | CRI > 80 | Protection type | IP65 |
| Colour tolerance | 3 | Protection class | II |
| Lifetime ta 25° C | L80/B10 > 50.000 h | Impact resistance | IK08 |
| Control gear | DALI | Windage area | 0,042m² |
| Input voltage AC | 220 – 240 V | Dimensions | Ø 176 mm, width 244 mm |
| Input voltage DC | 220 – 240 V | Weight | 3,80 kg |
| Voltage protection | 6 kV L/N \| 10 kV L/PE | Max. ambient temperature ta | 50° |
| Luminaires per B16A / C16A | 20 / 33 | | |