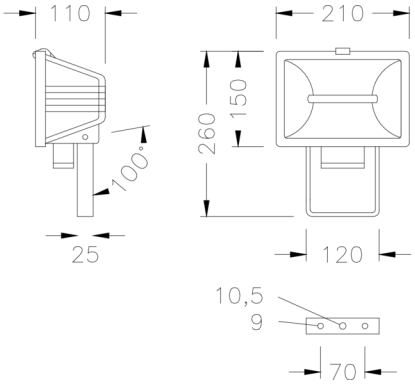

Halogen floodlight

8 539 091 009

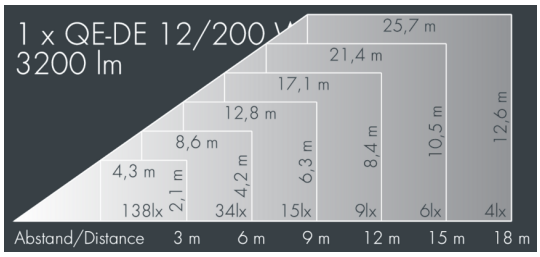

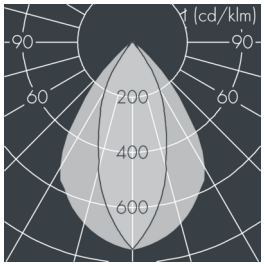

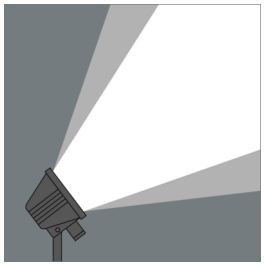

Customized solutions and modifications are possible: Special RAL, DB or NCS colours as polyester powder coat, luminaires in 2700 K and other colour temperatures and versions for high ambient temperature.

Specification text

unpainted, Colour: unpainted , all exterior parts are stainless steel, stainless steel release fastener, stainless steel mounting bracket: 2 holes Ø 9 mm, spacing 70 mm, 1 centre hole Ø 10.5 mm, tilt range: 100°, cable gland: PG13,5, connecting terminal: 3 pole, axially symmetrical aluminum reflector, Beam angle (FWHM): 34°, luminous flux: 9500 lm, wattage: 500 W, delivered lumens 19 lm/W, protection type IP65, protection class I, impact resistance IK07, dimensions (L×H×W): 210 × 110 × 245 mm, weight 1.42 kg

The modular luminaire design makes the replacement of components possible. The product meets the demands of the applicable EU guidelines and product safety regulations and bears the CE mark.

IP65 IK07

Specification

Wattage	500 W	Beam angle (FWHM)	34°
Delivered lumens	19 lm/W	Housing colour	unpainted
Control gear	on / off	Power supply cable	Ø 5 – 13 mm
		Protection type	IP65
		Protection class	I
		Impact resistance	IK07
		Dimensions	210 × 110 × 245 mm
		Weight	1,42 kg