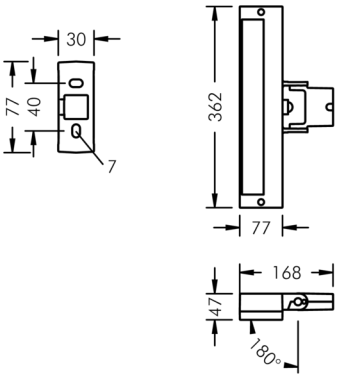

Highline

8 730 146 009

9 × 2,5 W, 1281 lm, 3000 K warm white,
wall washer 14° / 93°

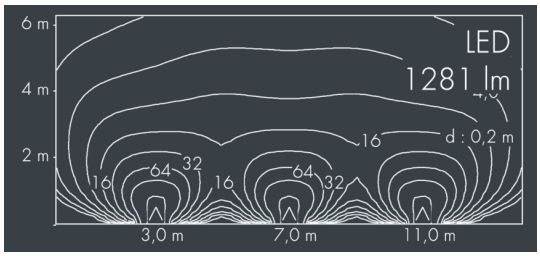

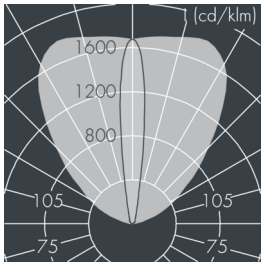

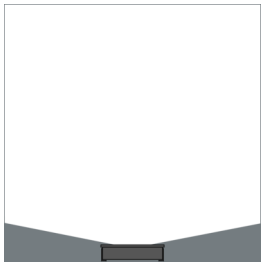

Customized solutions and modifications are possible: Special RAL, DB or NCS colours as polyester powder coat, luminaires in 2700 K and other colour temperatures and versions for high ambient temperature.

Specification text

housing made of corrosion-resistant die-cast aluminum AlSi12, polyester powder coated by high-quality and UV-stabilized coating process, Colour: black RAL 7021, all exterior parts are stainless steel, tempered safety glass, anti-reflective coating from 1 side, with partial frosting for uniform light diffraction and dark silk-print, silicon gasket, closure with 2 stainless steel screws, wall bracket: 2 elongated holes Ø 6,5 mm, spacing 40 mm, tilt range: 180°, cable gland: M20, connecting terminal: 3 pole, highly efficient optics made of transparent thermoplastic for precise lighting tasks , integral driver (DALI), CRI > 80, max 2 SDCM, service life L90/B10 > 50.000 h, Beam angle (FWHM): 14° / 93°, luminous flux: 1281 lm, wattage: 23 W, delivered lumens 56 lm/W, protection type IP67, protection class I, impact resistance IK08, windage area 0,029 m², dimensions (L×H×W): 362 × 47 × 77 mm, weight 1.7 kg

The modular luminaire design makes the replacement of components possible. The product meets the demands of the applicable EU guidelines and product safety regulations and bears the CE and ENEC marks.

IP 67 IK 08

Specification

Wattage	23 W	Beam angle (FWHM)	14° / 93°
Delivered lumens	56 lm/W	Housing colour	black RAL 7021
Light source	LED 3000 K	Power supply cable	Ø 6 – 13 mm
Color Rendering Index	CRI > 80	Protection type	IP67
Colour tolerance	max 2 SDCM	Protection class	I
Lifetime ta 25° C	L90/B10 > 50.000 h	Impact resistance	IK08
Control gear	on / off	Windage area	0,029m²
Input voltage AC	110 – 240 V	Dimensions	362 × 47 × 77 mm
Input voltage DC	195 – 255 V	Weight	1,70 kg
Voltage protection	2 kV L/N | 4 kV L/PE	Max. ambient temperature ta	45°
Luminaires per B16A / C16A	50 / 85		