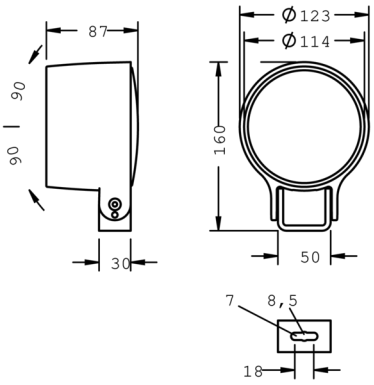

Monospot S2

8 992 065 189

9 W, 713 lm, 4000 K neutral white, DALI, asymmetrical wide beam 53° / 115°

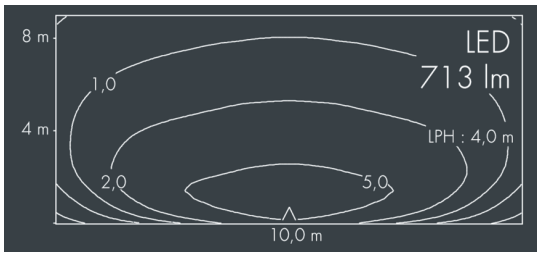

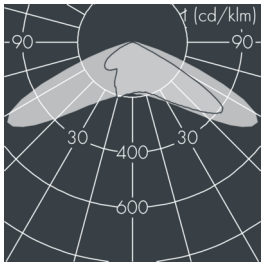

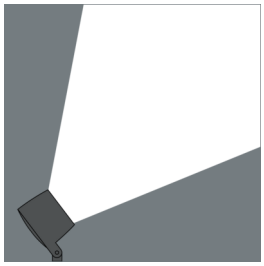

Customized solutions and modifications are possible: Special RAL, DB or NCS colours as polyester powder coat, luminaires in 2700 K and other colour temperatures and versions for high ambient temperature.

Specification text

housing made of corrosion-resistant die-cast aluminum AlSi12, polyester powder coated by high-quality and UV-stabilized coating process, Colour: white RAL 9002, all exterior parts are stainless steel, tempered safety glass, anti-reflective coating from 1 side, silicon gasket, closure with 2 stainless steel screws, mounting bracket: 1 elongated hole Ø 7 mm, spacing 18 mm, 1 centre hole Ø 8.5 mm, tilt range: 180°, cable gland: M16, connecting terminal: 5 pole, precise PMMA optics, inegral, dimmable driver (DALI), 70, max 2 SDCM, service life L90/B10 > 50.000 h, luminous flux: 713 lm, wattage: 9 W, delivered lumens 79 lm/W, protection type IP67, protection class I, impact resistance IK08, windage area 0,012 m², dimensions: Ø 123 mm, width 87 mm, weight 1.2 kg

The modular luminaire design makes the replacement of components possible. The product meets the demands of the applicable EU guidelines and product safety regulations and bears the CE and ENEC marks.

IP67 IK08

Specification

Wattage	9 W	Housing colour	white RAL 9002
Delivered lumens	79 lm/W	Power supply cable	Ø 5 – 9 mm
Light source	LED 4000 K	Protection type	IP67
Color Rendering Index	70	Protection class	I
Colour tolerance	max 2 SDCM	Impact resistance	IK08
Lifetime ta 25° C	L90/B10 > 50.000 h	Windage area	0,012m²
Control gear	DALI	Dimensions	Ø 123 mm, width 87 mm
Input voltage AC	220 – 240 V	Weight	1,20 kg
Input voltage DC	220 – 240 V	Max. ambient temperature ta	45°
Voltage protection	2 kV L/N | 4 kV L/PE		
Luminaires per B16A / C16A	50 / 0		