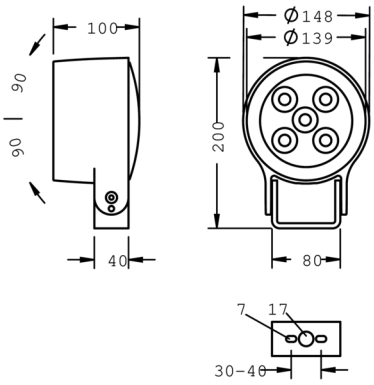

Monospot S3

8 993 045 039

5 × 5,2 W, 1817 lm, 4000 K neutral white, linear, horizontal 10° / 36°

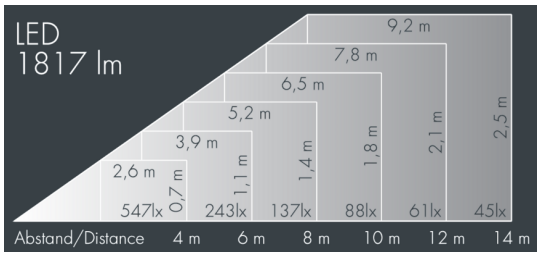

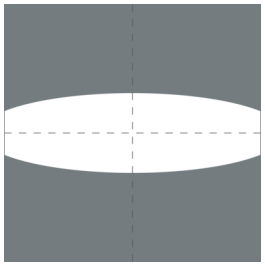

Customized solutions and modifications are possible: Special RAL, DB or NCS colours as polyester powder coat, luminaires in 2700 K and other colour temperatures and versions for high ambient temperature.

Specification text

housing made of corrosion-resistant die-cast aluminum AlSi12, polyester powder coated by high-quality and UV-stabilized coating process, Colour: black RAL 7021, all exterior parts are stainless steel, tempered safety glass, anti-reflective coating from 1 side, dark screenprint, silicon gasket, closure with 3 stainless steel screws, mounting bracket: 2 drilled holes Ø 7 mm, spacing 30-40 mm, 1 centre hole Ø 17 mm, tilt range: 180°, cable gland: M16, connecting terminal: 3 pole, precise PMMA optics, integral driver (AC/DC), CRI > 80, max 2 SCDM, service life L90/B10 > 50.000 h,
Beam angle (FWHM): 10° / 36°, luminous flux: 1817 lm, wattage: 25 W, delivered lumens 72 lm/W, protection type IP67, protection class I, impact resistance IK08, windage area 0,016 m², dimensions: Ø 148 mm, width 100 mm, weight 1.8 kg

The modular luminaire design makes the replacement of components possible. The product meets the demands of the applicable EU guidelines and product safety regulations and bears the CE and ENEC marks.

IP67 IK08

Specification

Wattage	25 W	Beam angle (FWHM)	10° / 36°
Delivered lumens	72 lm/W	Housing colour	black RAL 7021
Light source	LED 4000 K	Power supply cable	Ø 6 – 13 mm
Color Rendering Index	CRI > 80	Protection type	IP67
Colour tolerance	max 2 SCDM	Protection class	I
Lifetime ta 25° C	L90/B10 > 50.000 h	Impact resistance	IK08
Control gear	on / off	Windage area	0,016m²
Input voltage AC	220 – 240 V	Dimensions	Ø 148 mm, width 100 mm
Input voltage DC	220 – 240 V	Weight	1,80 kg
Voltage protection	2 kV L/N | 4 kV L/PE	Max. ambient temperature ta	35°
Luminaires per B16A / C16A	50 / 85		