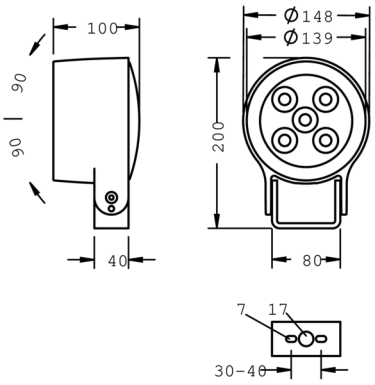


## Monospot S3

8 993 045 179

5 × 5,2 W, 1505 lm, 4000 K neutral white, DALI, linear, rotatable 6° / 23°

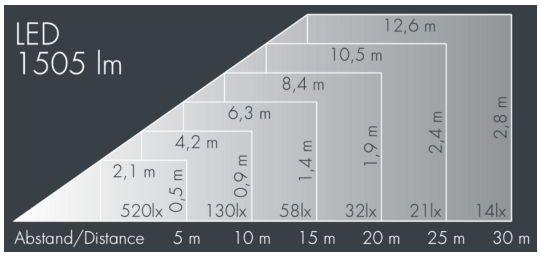


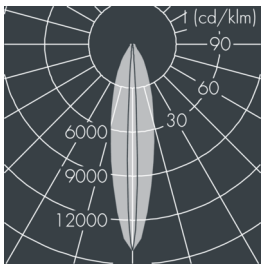


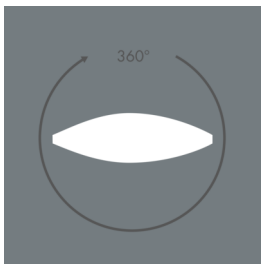


Customized solutions and modifications are possible: Special RAL, DB or NCS colours as polyester powder coat, luminaires in 2700 K and other colour temperatures and versions for high ambient temperature.

### Specification text

housing made of corrosion-resistant die-cast aluminum AlSi12, polyester powder coated by high-quality and UV-stabilized coating process, Colour: black RAL 7021, all exterior parts are stainless steel, tempered safety glass, anti-reflective coating from 1 side, silicon gasket, closure with 3 stainless steel screws, mounting bracket: 2 drilled holes Ø 7 mm, spacing 30-40 mm, 1 centre hole Ø 17 mm, tilt range: 180°, cable gland: M16, connecting terminal: 5 pole, precise PMMA optics, inegral, dimmable driver (DALI), CRI > 80, max 2 SDCM, service life L90/B10 > 50.000 h,
Beam angle (FWHM): 6° / 23°, luminous flux: 1505 lm, wattage: 26 W, delivered lumens 58 lm/W, protection type IP67, protection class I, impact resistance IK08, windage area 0,016 m², dimensions: Ø 148 mm, width 100 mm, weight 1.8 kg

The modular luminaire design makes the replacement of components possible. The product meets the demands of the applicable EU guidelines and product safety regulations and bears the CE and ENEC marks.

IP67 IK08

## Specification

| | | | |
|---|---|---|---|
| Wattage | 26 W | Beam angle (FWHM) | 6° / 23° |
| Delivered lumens | 58 lm/W | Housing colour | black RAL 7021 |
| Light source | LED 4000 K | Power supply cable | Ø 6 – 13 mm |
| Color Rendering Index | CRI > 80 | Protection type | IP67 |
| Colour tolerance | max 2 SDCM | Protection class | I |
| Lifetime ta 25° C | L90/B10 > 50.000 h | Impact resistance | IK08 |
| Control gear | DALI | Windage area | 0,016m² |
| Input voltage AC | 220 – 240 V | Dimensions | Ø 148 mm, width 100 mm |
| Input voltage DC | 220 – 240 V | Weight | 1,80 kg |
| Voltage protection | 2 kV L/N \| 4 kV L/PE | Max. ambient temperature ta | 35° |
| Luminaires per B16A / C16A | 50 / 85 | | |