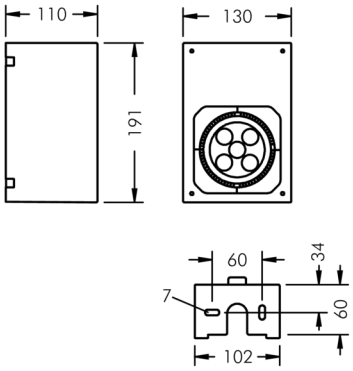

Nightfocus

8 395 045 029

5 × 1 W, 505 lm, 4000 K neutral white,
linear beam spread, vertical, gimbal mounted, adjustable 47° / 8°

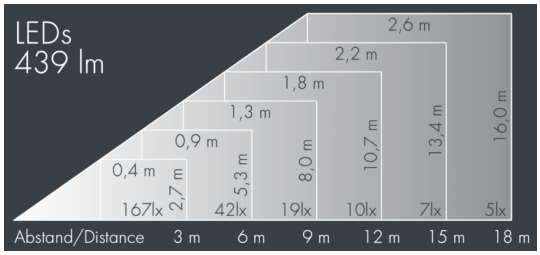

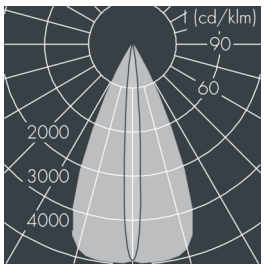

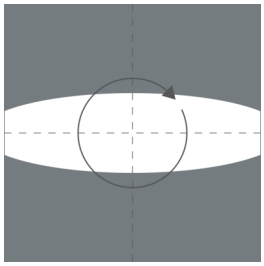

Customized solutions and modifications are possible: Special RAL, DB or NCS colours as polyester powder coat, luminaires in 2700 K and other colour temperatures and versions for high ambient temperature.

Specification text

housing made of corrosion-resistant die-cast aluminum AlSi12, polyester powder coated by high-quality and UV-stabilized coating process, Colour: black RAL 7021, all exterior parts are stainless steel, tempered safety glass, anti-reflective coating from 1 side, silicon gasket, closure with 4 stainless steel screws, wall mounting: 2 drilled holes Ø 7 mm, spacing 60 mm, cable gland: up to Ø 13 mm, recessed or surface mounted cable, connecting terminal: 3 pole, gimbal mounted, tilt range: 0-15, integral control gear, CRI > 80, max 2 SDCM, service life L90/B10 > 50.000 h, Beam angle (FWHM): 47° / 8°, luminous flux: 505 lm, wattage: 7 W, delivered lumens 72 lm/W, protection type IP65, protection class I, impact resistance IK08, windage area 0,025 m², dimensions (L×H×W): 191 × 110 × 130 mm, weight 3.657 kg

The modular luminaire design makes the replacement of components possible. The product meets the demands of the applicable EU guidelines and product safety regulations and bears the CE mark.

IP65 IK08

Specification

Wattage	7 W	Beam angle (FWHM)	47° / 8°
Delivered lumens	72 lm/W	Housing colour	black RAL 7021
Light source	LED 4000 K	Protection type	IP65
Color Rendering Index	CRI > 80	Protection class	I
Colour tolerance	max 2 SDCM	Impact resistance	IK08
Lifetime ta 25° C	L90/B10 > 50.000 h	Windage area	0,025m²
Control gear	on / off	Dimensions	191 × 110 × 130 mm
Input voltage AC	220 – 240 V	Weight	3,66 kg
Voltage protection	1 kV L/N | 0 kV L/PE		